FILE PROJECTOR POWER 200W





ASVitae group

ASV® asn® LED Ruviser® LUMILIGHT® RETAIL LIGHTING

DESCRIPTION:



The Power 200W floodlight provides powerful and efficient sports lighting, specially designed for outdoor environments. Its robust and durability-oriented construction makes it an ideal solution for demanding installations and industrial areas.

It integrates state-of-the-art LED technology, optimizing energy consumption while ensuring high performance.



- The electrical box and luminaire feature an independent structure.
- PC lens optics providing high visual comfort and uniform light distribution.
- Overall protection rating IP67 and IK10.
- Surge protection up to 10 kV.
- Highly resistant to rain and other atmospheric conditions.
- Easy aiming and orientation during installation.
- Polyester powder coating resistant to UV rays and corrosion.
- No photobiological risk (no risk associated with infrared, blue light, or UV radiation) in accordance with EN 62471:2008.
- External screws made of 304 stainless steel.

STANDARDS AND APPLICATIONS

- EN 60598-1:2015
- EN 62493: 2010
- EN 55015: 2013
- EN 50102:1995 + A1:1998
- EN 61347-2-13
- EN 61000-3-3: 2014
- EN 62262: 2002
- EN 60598-2-3:2003
- EN 61000-3-2: 2014
- EN 60598-2-5
- EN 61547: 2009
- EN 13032-4
- EN 62471: 2008
- EN 61347-1
- EN 60231:2008 + A1:2013+ A2:2015

Specially efficient in:

- Soccer Fields
- Sports Fields
- Sports Center
- Parking Lots

CHARACTERISTICS

Electrical Characteristics

- Input voltage..... 230 Vac
- Input frequency..... 47–63 Hz
- Power factor..... 0.98
- Electrical class..... Class II
- Programmable current..... 0.825 – 1.4 A
- LF output current ripple..... N/A
- Constant Light Output (CLO)..... N/A
- Driver..... Invertronics / Mean Well
- Power..... 200W
- Electrical protection..... 6 kV (driver), optional 10 kV
- Thermal protection..... Self-protected driver
- HF output current ripple..... N/A
- Operating temperature..... -40ºC to +70ºC
- Driver diagnostics..... N/A
- Driver lifetime..... 100,000 hours

Mechanical Characteristics

- Material..... Stainless steel
- Lenses..... Polycarbonate / PMMA
- Weight..... 7 kg
- Installation..... Yoke mount
- Wind surface area (module)..... 0.0798 m²
- Dimensions.....285x280x160mm

Dimming and Programming

- Dimming..... 1–10V / DALI
- Autonomous programming..... Programmable
- Point-to-point control..... Compatible
- Centralized dimming..... PWM
- Control Line..... Yes
- Bluetooth dimming..... Optional

Options

- *SRI*..... N/A
- *Surge Protection*..... N/A
- *Connector*.....N/A
- *Sensors*..... N/A

Photometric Characteristics

- Light source..... Nichia High Power
- LED luminous efficacy..... 150 lm/W
- Luminous flux..... 30000lm
- CRI..... >80
- Protection..... Yes
- Lens efficiency..... >92%
- LED lifetime..... >100,000 hours
- Color temperature..... 3000K / 4000K / 5000K
- Overheating protection..... N/A
- Optical distributions.. 15º / 30º / 60º / 90º / Asymmetric
- ULOR (Upward Light Output Ratio)..... <0.1%
- Lumen maintenance..... Linear programmed over time (CLO)

* The photometric values shown are subject to slight variations resulting from configuration factors such as the optics used in the luminaire or operating temperature.

** For other configurations or required power ratings, please contact the factory.

DIMENSIONS

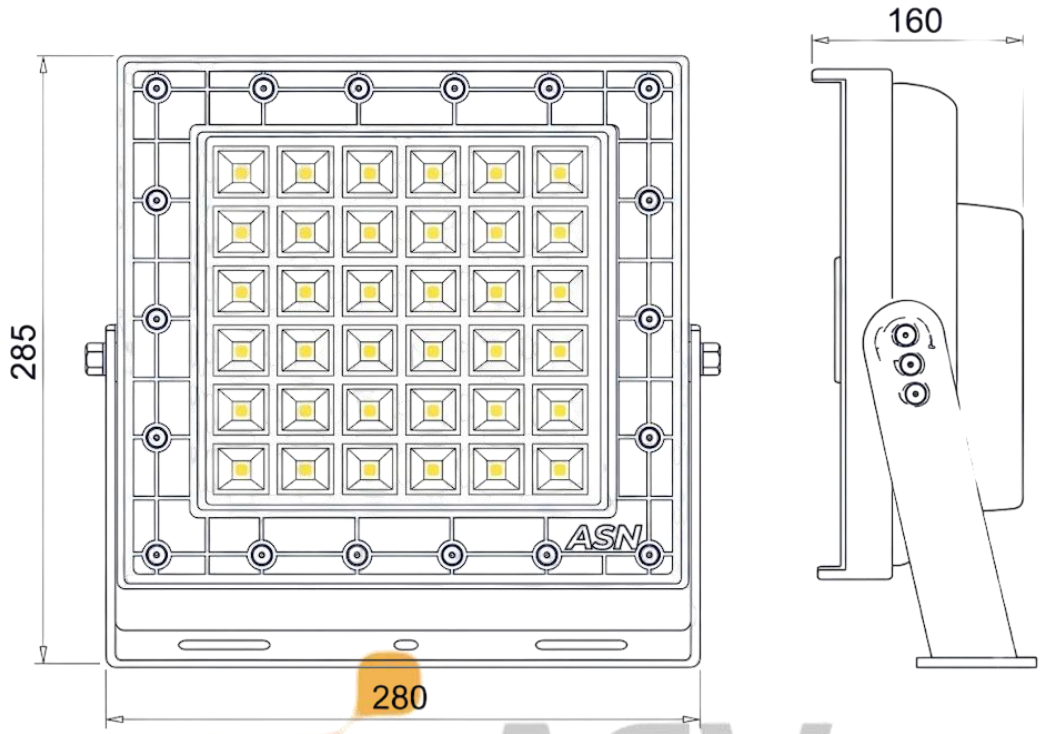

OPTICAL DISTRIBUTIONS

15º

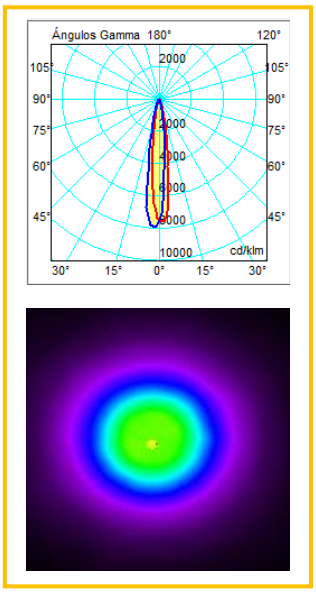

30º

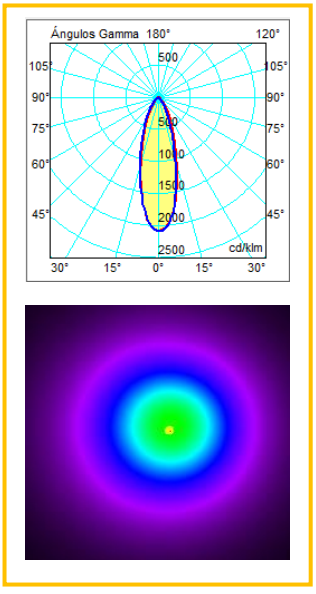

60º

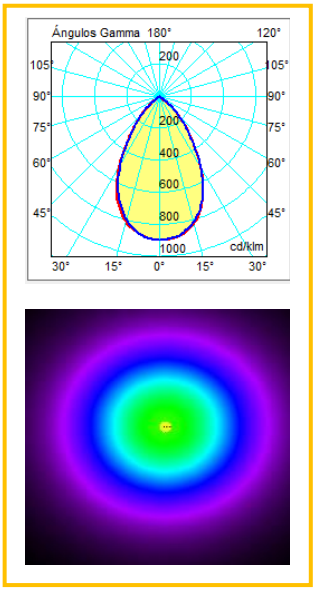

90º

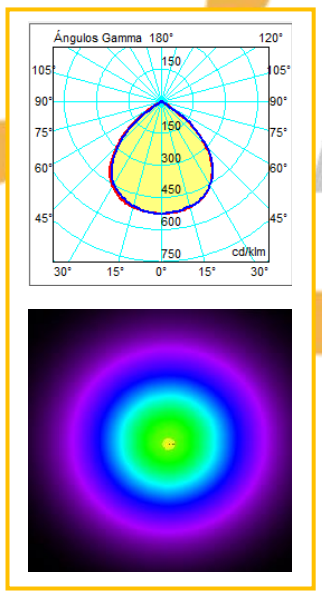

ASIMETRÍCA

