FILE PROJECTOR CUBE





ASVitae group

ASV® asn® LED Ruviser® LUMILIGHT® RETAIL LIGHTING



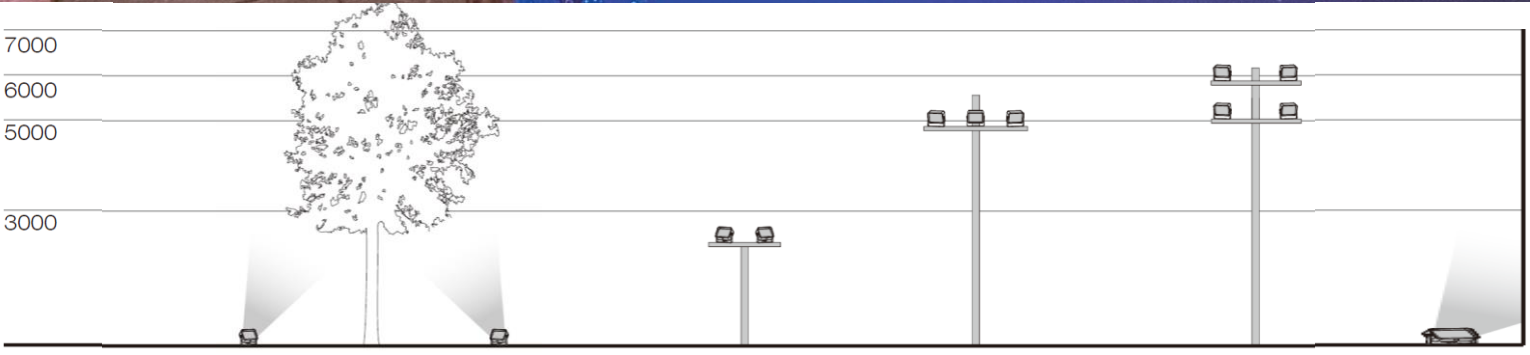
7000
6000
5000
3000

DESCRIPTION:



The **Screen floodlight** has been designed to enhance and showcase the beauty of buildings, monuments, and urban landscapes. Its distinctive square shape gives it an elegant and contemporary appearance while optimizing the visual effects it creates.

Equipped with state-of-the-art LED technology, Screen floodlights provide powerful and energy-efficient illumination, ensuring outstanding nighttime visibility without compromising sustainability.



- Die-cast aluminum housing.
- Super White tempered glass.
- Distinctive design with two available size versions.
- PC lens optical system providing high visual comfort and uniform light distribution.
- UV-resistant polyester powder coating. Corrosion resistance exceeds 1,000 hours.
- Photobiologically safe (no risk associated with infrared, blue light, or UV radiation) in accordance with EN 62471:2008.
- External screws manufactured from AISI 304 stainless steel.

STANDARDS AND APPLICATIONS

- EN 60598-1:2015
- EN 62493: 2010
- EN 55015: 2013
- EN 50102:1995 + A1:1998
- EN 61347-2-13
- EN 61000-3-3: 2013
- EN 62262: 2002
- EN 60598-2-3:2003
- EN 61000-3-2: 2014
- EN 61547: 2009
- EN 13032-4
- EN 62471: 2008
- EN 61347-1

Specially efficient in:

- Building
- Museums
- Commercial Areas
- Residential Areas
- Parks
- Gardens

CHARACTERISTICS

Electrical Characteristics

- Supply voltage……..... 230 Vac
- Supply frequency……..… 47–63 Hz
- Power factor……..... >0.97
- Electrical class…….. Class I / Class II
- Programmable output current……0.2 – 1 A
- LF output current ripple……..…… N/A
- Constant Light Output (CLO)…….. Available
- Power consumption……..... 35 W
- Electrical protection…….. 6 kV (driver), optional 10 kV
- Thermal protection……..…... Self-protected driver
- HF output current ripple……..…….. N/A
- Operating temperature…..……..... -40°C to +55°C
- Driver diagnostics……..……..…… Active
- Driver lifetime……..……..…….. 100,000 hours
- Current regulation…… Modulation of amplitude (Flicker-free)

Mechanical Characteristics

- Material…. Corrosion-resistant aluminum alloy
- Lenses……..…..… Polycarbonate / PMMA
- Weight……..……..... 2.2 kg
- Colour……..…..…… RAL 9007
- Diffuser……..…….. Flat tempered glass
- Mounting……..…… Yoke bracket
- Wind-exposed surface area……..... 0.030 m²

Dimming and Control

- Dimming……..…… 1–10 V / DALI
- Autonomous programming……. Up to 5 steps
- Point-to-point control ……..…….. Compatible
- Centralized control……..…… Optional (AmpDim)
- Control line……..…….. Optional
- Bluetooth control…..... Optional

Options

- *SRI*……Yes
- *Surge protections*……..……Yes
- *Connector*…..…….. Nema / Zhaga
- *Sensors*……..……..……Yes

Photometric Characteristics

- Number of LEDs……..…….... 12 LEDs
- LED lifetime……..…… >100,000 hours
- CRI……..... CRI >80
- Modularity…..... Compatible with Zhaga Book 15
- Lens efficiency……..……..... >92%
- Lumen maintenance …….... Linear Constant Light Output (CLO) programming over time
- Maximum luminous efficacy……..... 135 lm/W
- Luminous flux……..…… 13,500 lm
- Correlated Colour Temperature (CCT)……...3000K/ 4000K
- Overtemperature protection … NTC 15 kΩ + 2000 Ω
- Optical distributions…..…….. 4 different options
- ULOR……..……..…….. <0.1 %
- Protection……..……..…….. Yes

DIMENSIONS

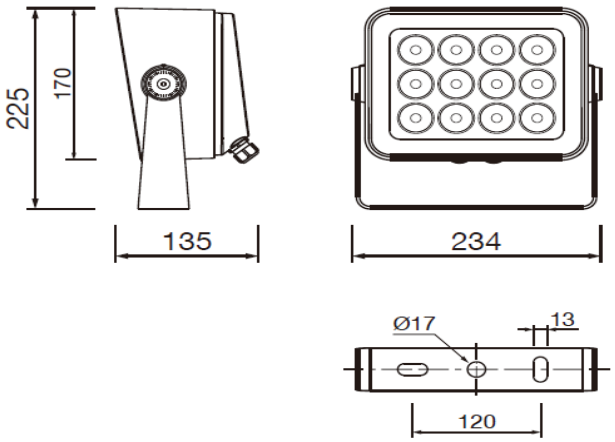

OPTICAL DISTRIBUTIONS

15º

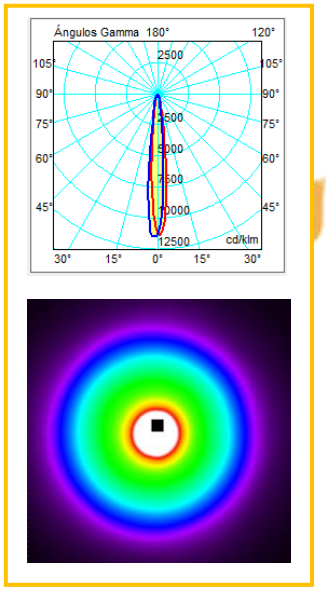

25º

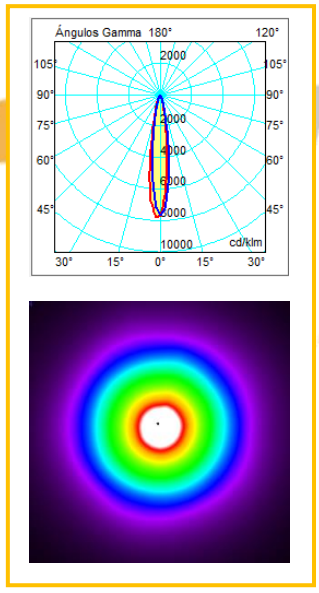

40º

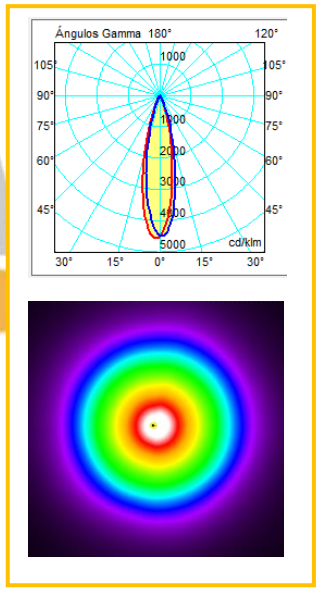

60º

